# Raspberry Pi

## A Low Cost Platform
## For Amateur Radio Projects

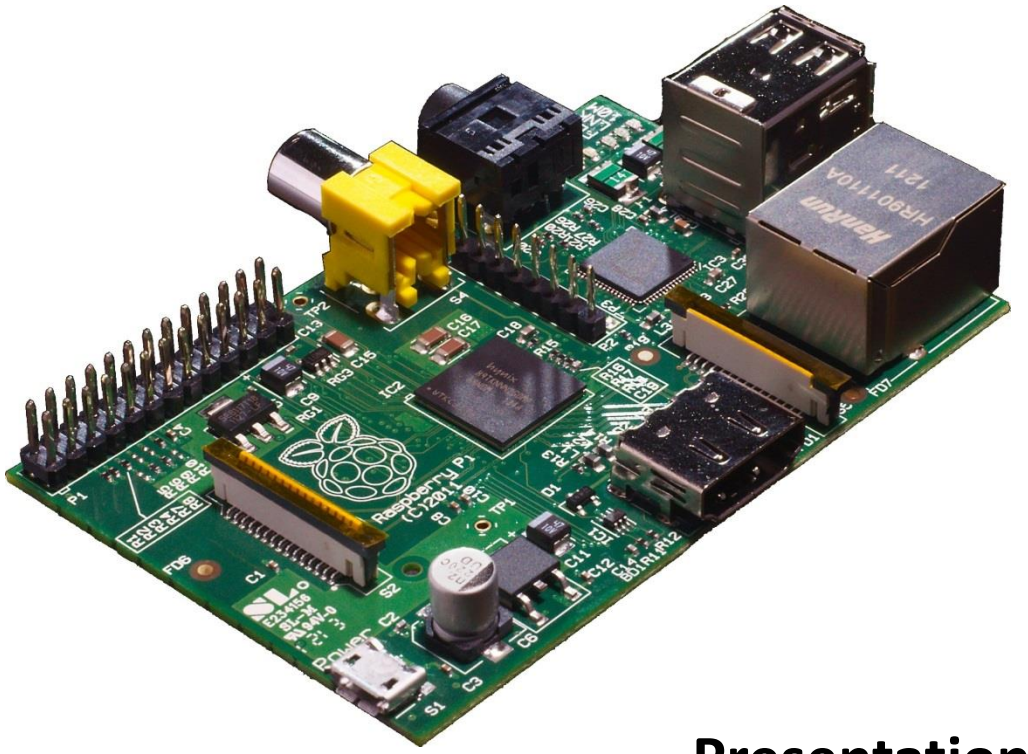

**Ed James KA8JMW**
**Mike Pendley K5ATM**

**Presentation to**
**HamCon Colorado**
**June 29th, 2013**

**Dedicated to Art James**

**WD8MMG**

**1924-2013**

**My Dad, a member of**

**”The Greatest Generation”**

# What is the Raspberry Pi

A credit-card-sized single-board computer developed in the UK by the Raspberry Pi Foundation to promote teaching of basic computer science in schools.

Hardware includes a Broadcom BCM2835 System on a Chip (SoC): ARM1176JZF-S 700 MHz processor VideoCore IV GPU, 512MB RAM.

SD card for booting and long-term storage.

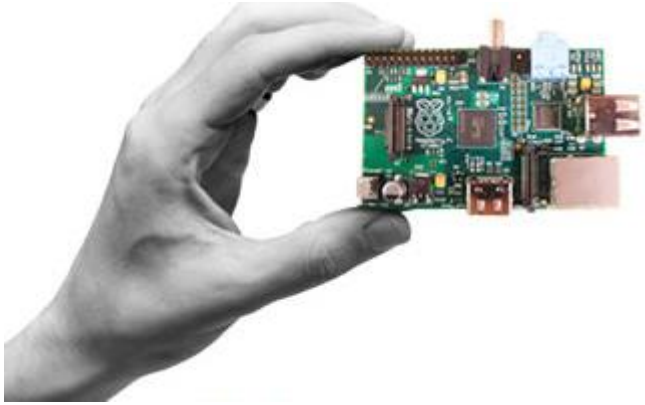

Nominal price is: $35.00

# What Does a RPi Look Like?

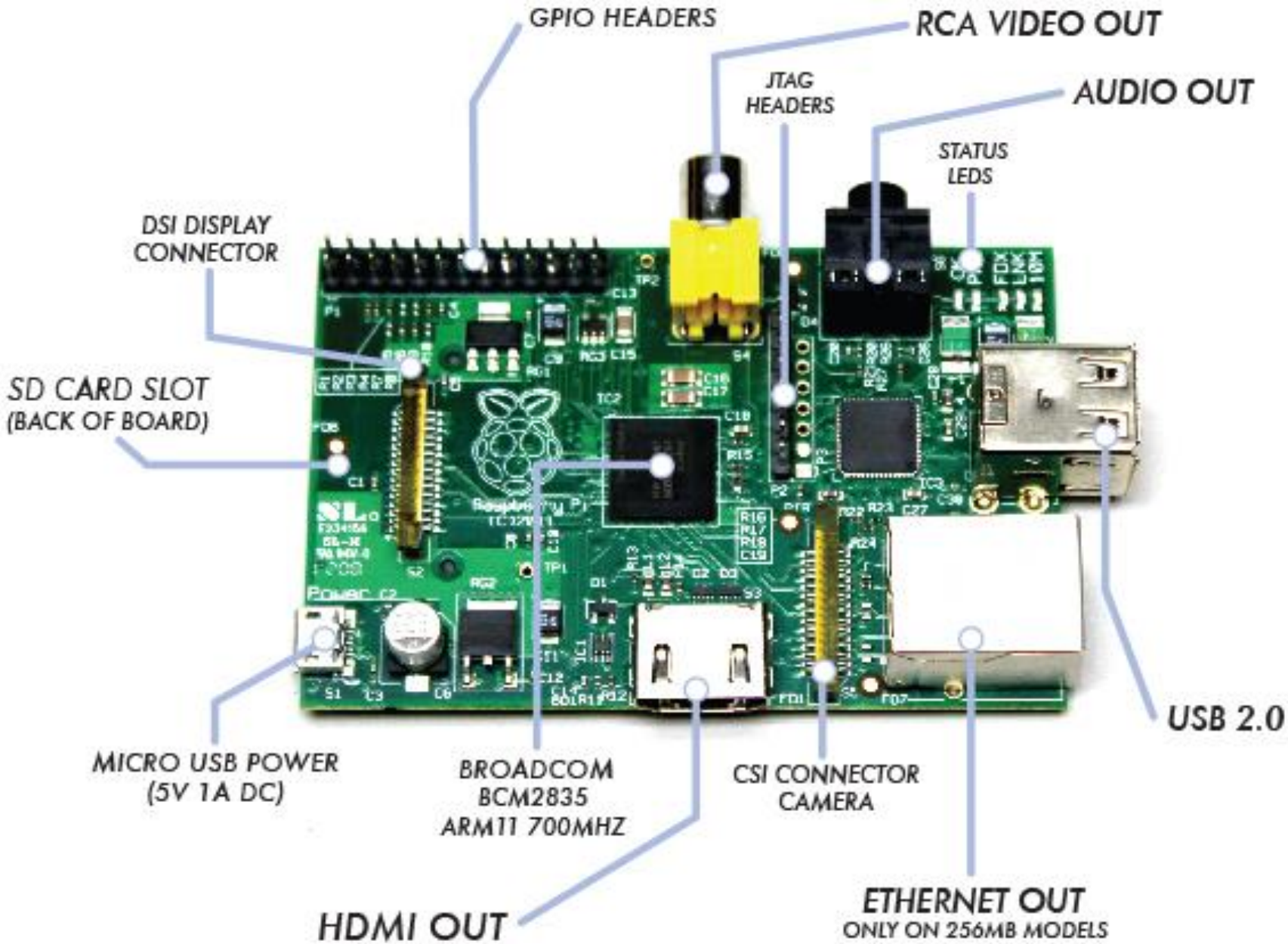

# Tell me more

The RPi is an open project. Schematics and software source code are freely available

Performance is something like a 300MHz Pentium II -- or PC computing circa 1997-1998

Linux is the preferred operating environment, many different distributions are available

# Supported Operating Systems

Linux

- Raspbian, Debian GNU/Linux, Fedora, Arch Linux ARM

RISC OS

Unix:

- FreeBSD, NetBSD

Plan 9

Android 2.3 (Gingerbread), 4.0 (Ice Cream Sandwich)

Googgle Chrome OS

Firefox OS

AROS

…

And the list just keeps on growing.

http://en.wikipedia.org/wiki/Raspberry_Pi

# Connecting with your RPi
# The User Interface

- X-windows GUI
  - Keyboard, mouse, HDMI
  - Xrdp (headless)

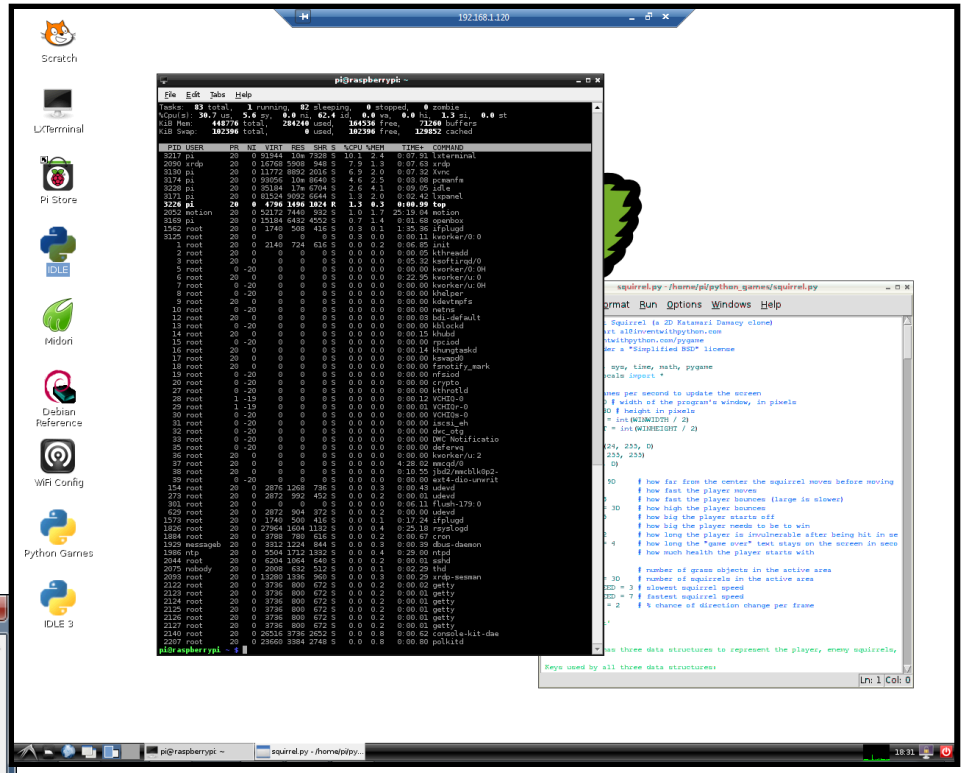


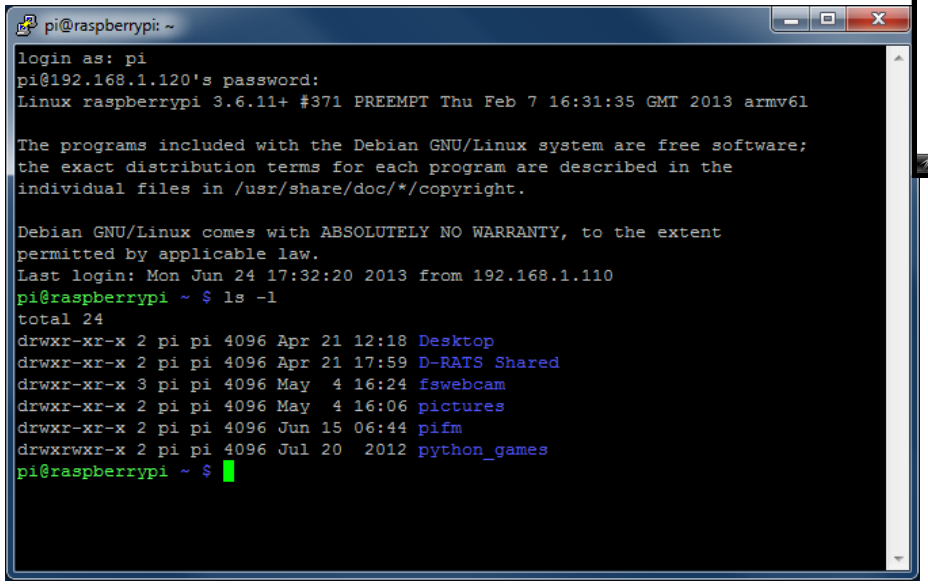


- Command line
  - Serial Terminal
  - SSH user interface (headless)

# Let's Dig in a little deeper
# Raspberry Pi (RPi) General Purpose Input/Output (I/O)

- The RPi board has a 26-pin expansion header with 17 GPIO pins as well as +3.3 V, +5 V and GND supply lines.
- The default configuration provides 15 GPIO pins and a UART.
- The operating system also supports predefined alternate functions for some of the pins
  - $I^2C$ (Inter-Integrated Circuit) is a two wire communication bus developed by Philips, for chip to chip communication. Commonly used for connecting sensors and port expanders.
  - Serial Peripheral Interface (SPI) bus a synchronous serial data bus designed by Motorola. Commonly used in high speed applications such as digital audio, digital signal processing and telecommunications.
  - UART, TXD and RXD
  - A Pulse Width Modulator (PWM)
- Operating system makes the hardware available to a variety of high level program languages including Python, C, Java, BASIC along with Perl and Bash shell scripts.
- Additional I/O pins are available via bit-banging and hacking

# Serial Peripheral Interface (SPI)

- Full duplex communication
- Higher throughput than I²C
- Complete protocol flexibility for the bits transferred
  - Not limited to 8-bit words
  - Arbitrary choice of message size, content, and purpose
- Extremely simple hardware interfacing
  - Typically lower power requirements than I²C
  - No arbitration or associated failure modes
  - Slaves use the master's clock, and don't need precision oscillators
  - Slaves don't need a unique address — unlike I²C
  - Transceivers are not needed
- Uses only four pins on IC packages, and wires in board layouts or connectors, much fewer than parallel interfaces
- At most one unique bus signal per device (chip select); all others are shared
- Signals are unidirectional allowing for easy isolation
- Not limited to any maximum clock speed, enabling potentially high throughput

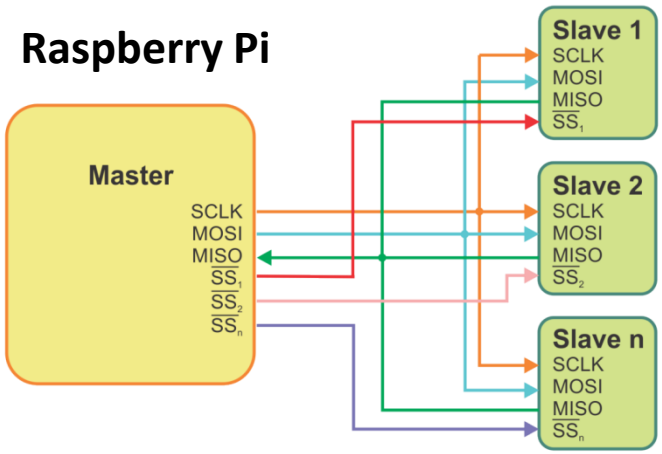


# RPi GPIO Pinout

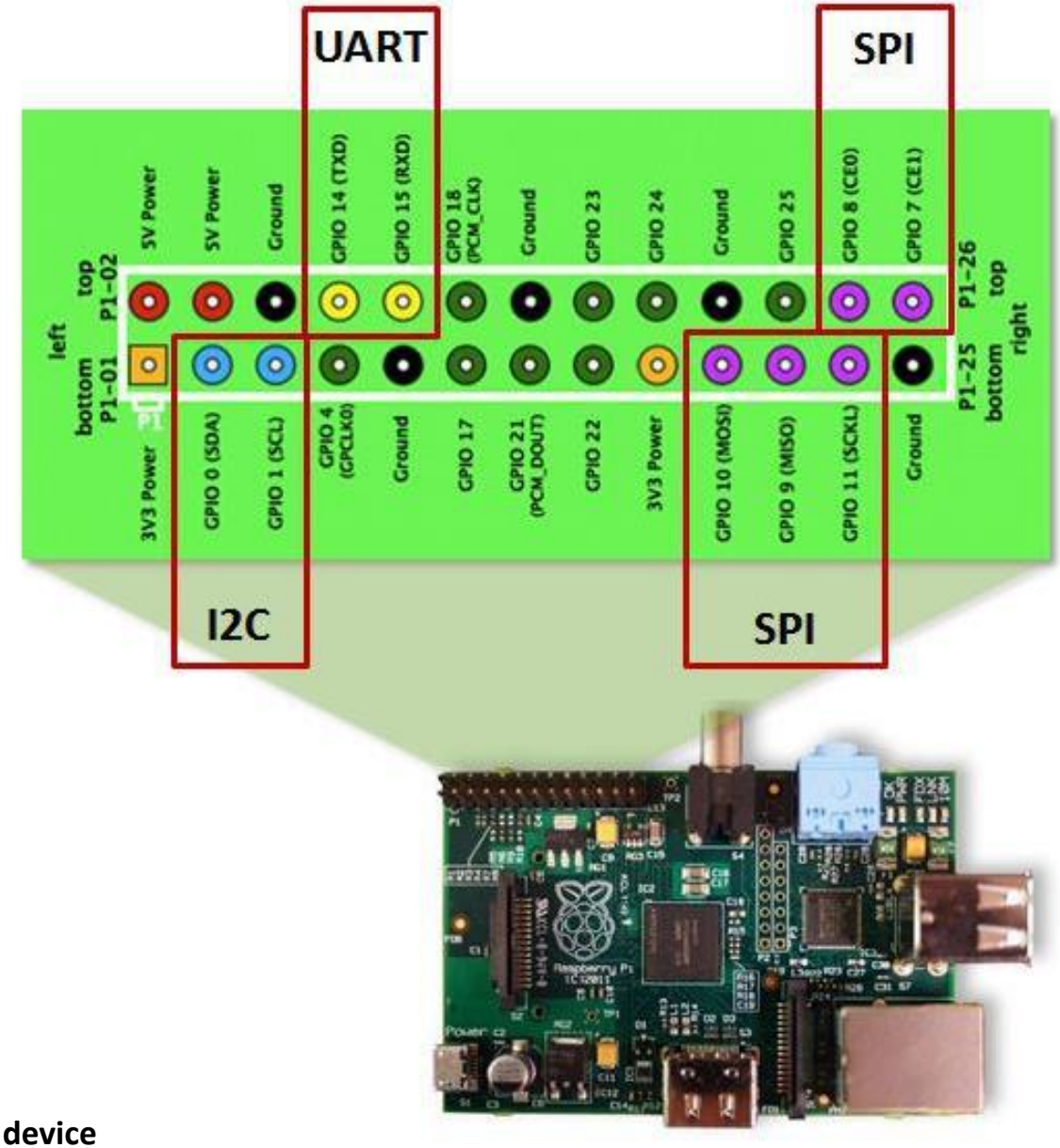


1. **The RPi is a 3.3V device**
2. **The GPIO pins are unbuffered and unprotected, so if you short something out, you could fry your whole RPi, be careful!**

# GPIO I/O Example

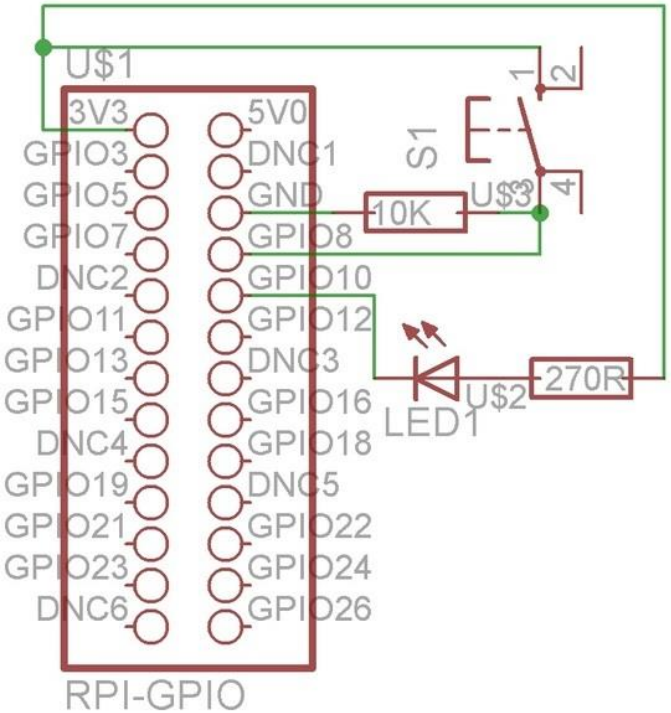


```
# example1.py
# Import the required module.
import RPi.GPIO as GPIO
# Set the mode of numbering the pins.
GPIO.setmode(GPIO.BOARD)
# GPIO pin 10 is the output.
GPIO.setup(10, GPIO.OUT)
GPIO pin 8 is the input.
GPIO.setup(8, GPIO.IN)
# Initialise GPIO10 to high (true) so that the LED is off.
GPIO.output(10, True)
while 1:
   if GPIO.input(8):
      GPIO.output( 10, False)
   else:
      # When the button switch is not pressed, turn off the LED.
      GPIO.output( 10, True)
```

http://www.cl.cam.ac.uk/projects/raspberrypi/tutorials/turing-machine/two.html

# I²C I/O Example

**PCF8574A 8-bit I/O Expander for I²C BUS**

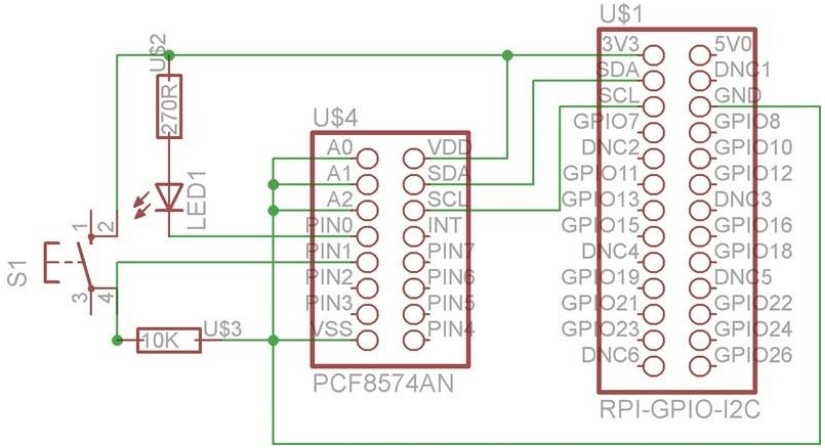


```
# example2.py
import smbus
# Access the i2c bus now.
bus = smbus.SMBus(0)
# Now write 1 to the device with the address 56, turn off the LED by setting pin 0 to 1, and reset the switch by switching pin 1 to 0.
bus.write_byte(56, 1)
while 1:
# If the button is pressed, pin 1 will be 1 and the byte read from the device with address 56 will be 00000010 (2) or 0000000011 (3).
    if bus.read_byte(56) in (2,3):
# Write 00000000, setting pin 0 to 0, turning on the LED, and resetting the switch with pin 1 to 0.
        bus.write_byte(56, 0)
    else:
# Write 00000010, setting pin 0 to 1, turning off the LED, and pin 1 to 0 to reset the switch.
        bus.write_byte(56, 1)
```



http://www.cl.cam.ac.uk/projects/raspberrypi/tutorials/turing-machine/two.html

# A Sampling of Raspberry Pi Projects

Talking Book

Web Cam


Home Media Center

Balloon

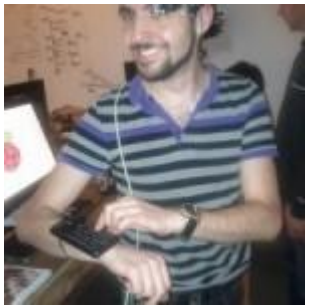

Wearable Computer

Beet Box

# 64 RPi low-cost “Supercomputer” Cluster

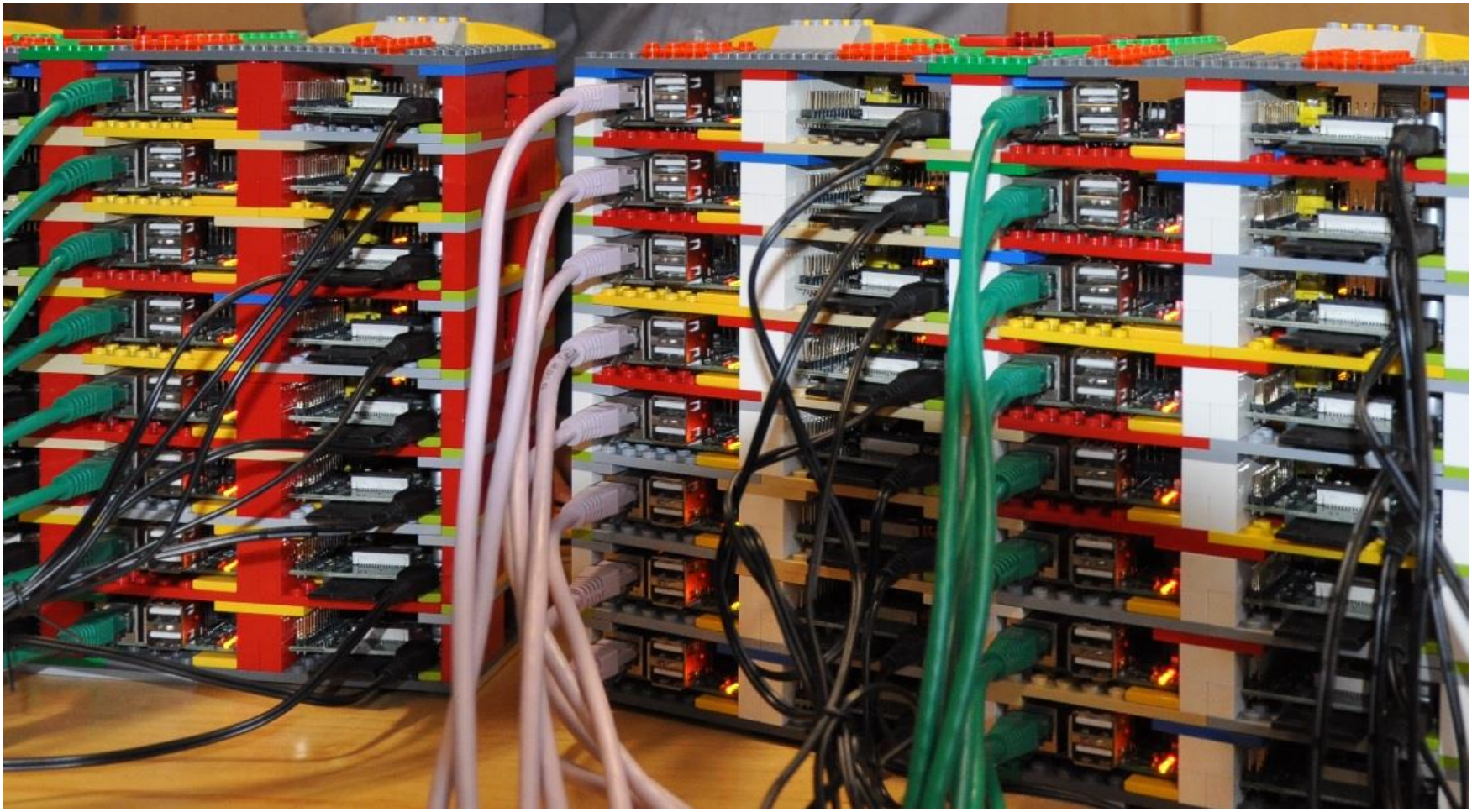

# K5ATM's First Project

## A Standalone WiFi Web Server

- The Albuquerque Amateur Radio Club (AARC) web site in a box!
- Accessible from smart phone / Tablet
- Portable enough to take it to meetings or into the field.
- Load it with whatever information you might need.

# A Standalone WiFi Web Server (cont.)

Software

- Raspbian “wheezy” OS
- Apache web server
- MySQL
- PHP
- FTP
- WiFi and DHCP Daemons

Maintained via SSH and FTP (headless)

# Now, The Really Fun Stuff
# Amateur Radio and the RPi

## APRS I-Gate (the PiGate)

Software running on the Raspberry-Pi reads the audio signal coming into the sound-card, demodulates the signal, decodes the packet and then sends it to an APRS-IS server over the WiFi link


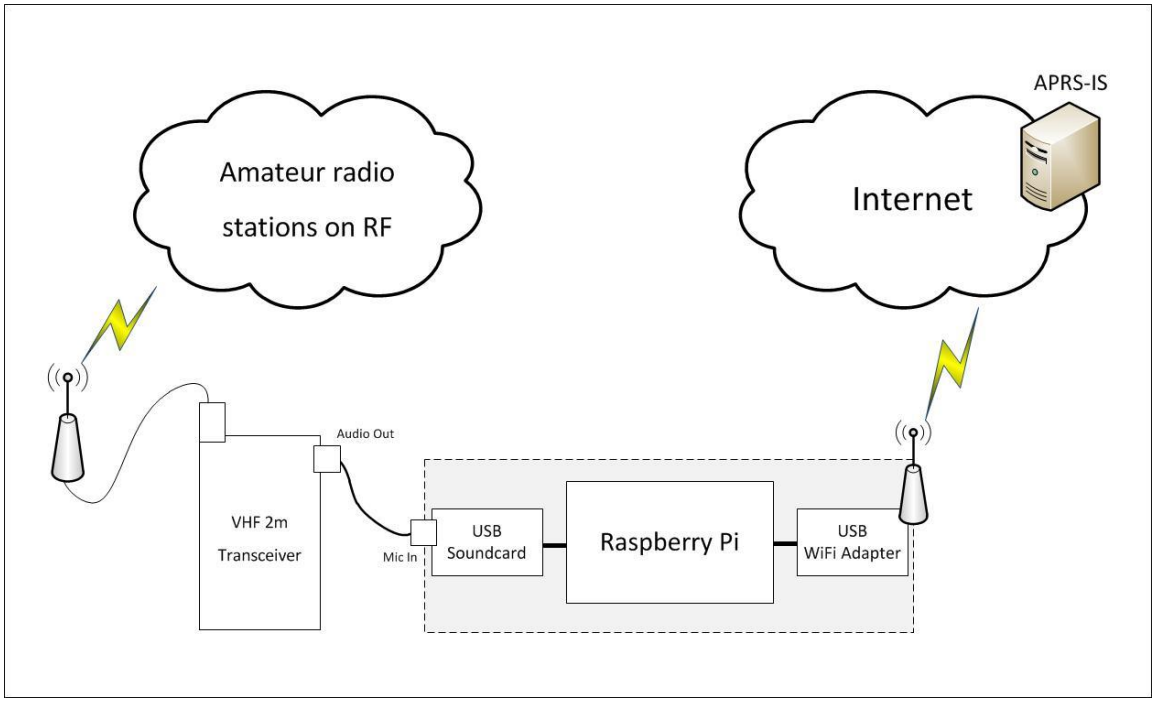


http://www.ultratechie.com/2012/10/pigate/

# TNC-Pi RPi

TNC-Pi is a special version of TNC-X designed to interface directly with the Raspberry Pi computer. It can connect to the Pi either via the Pi's serial port, or via the I2C protocol. In the latter case, a single Pi can support multiple TNC-Pi's at the same time, since each TNC-Pi can be given a unique I2C address.

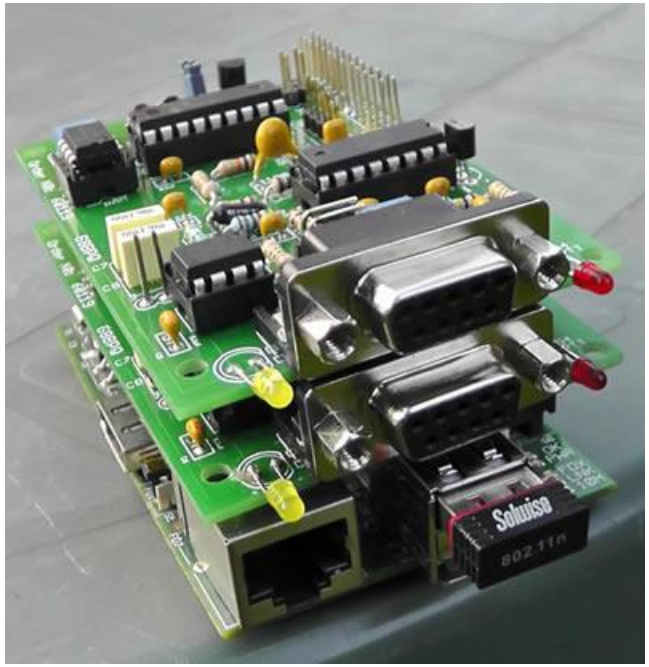

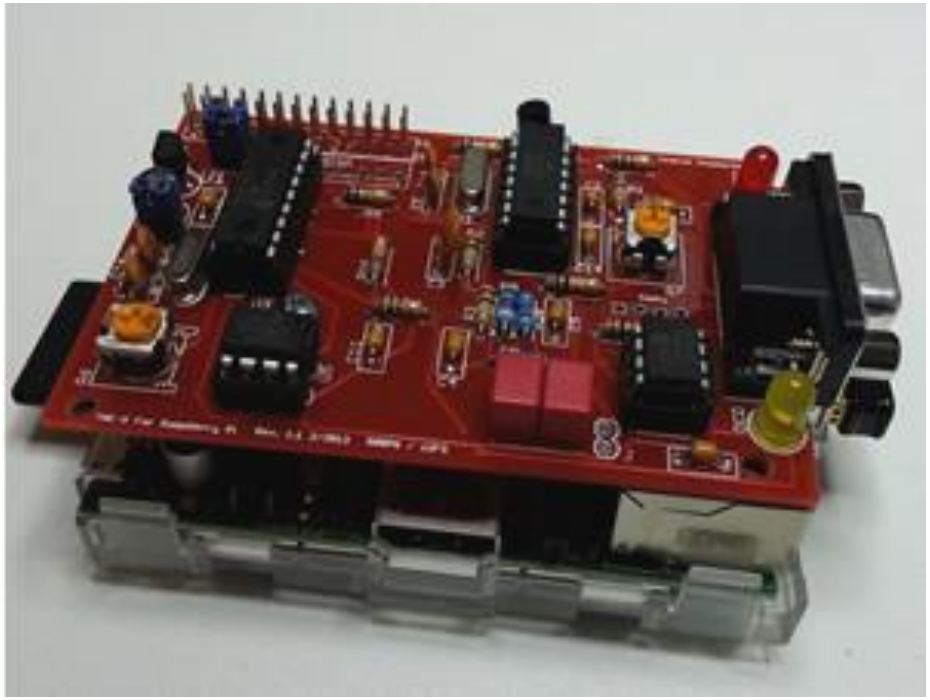

Run a pair of TNC-Pi's with a single RPi to create a dual frequency digipeater.

http://tnc-x.com/

# D-Star DV Access Point Dongle & RPi

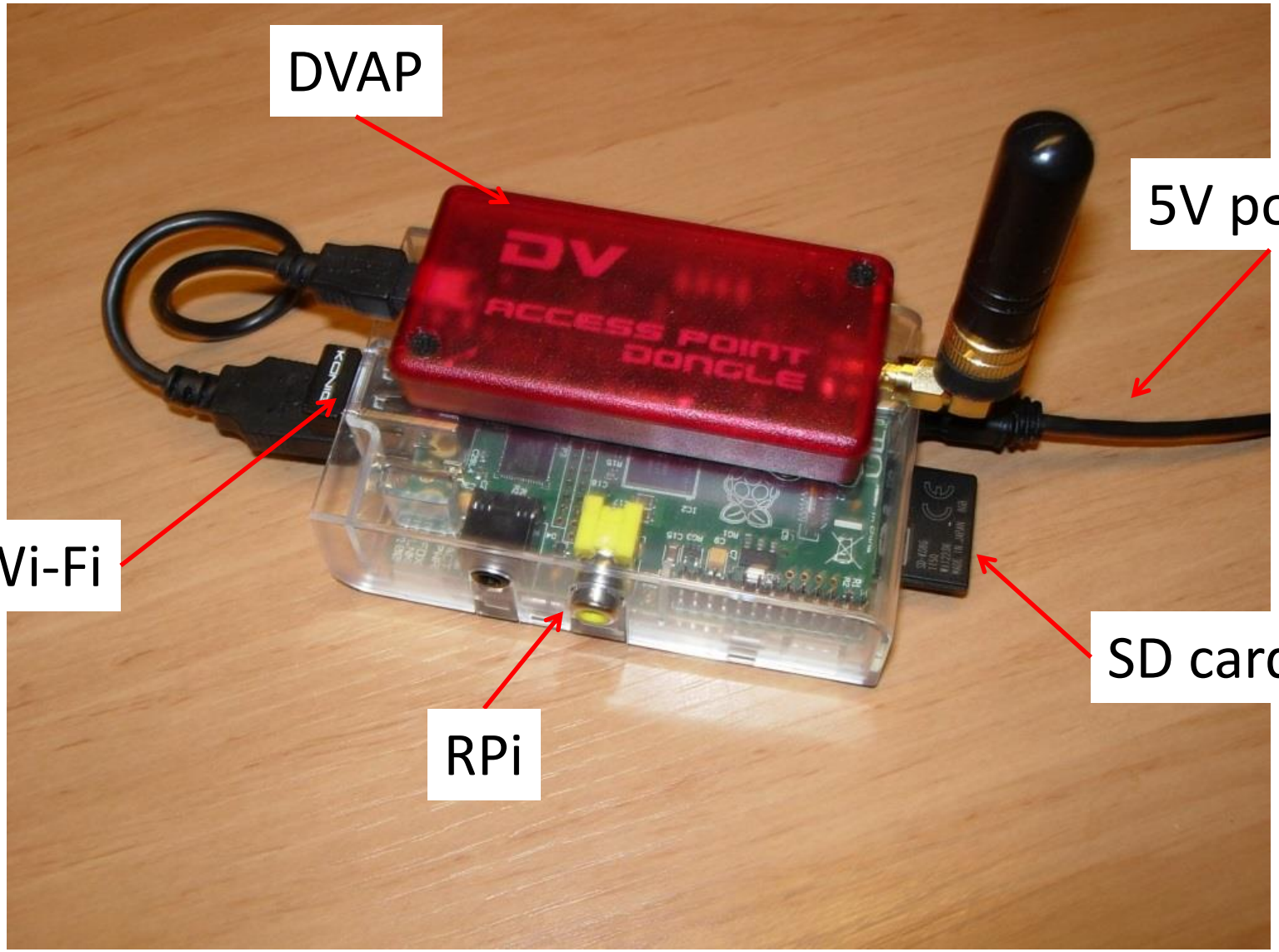


Creates a point of presence on the D-Star network

# GMSK modem for the RPi

The Raspberry Pi GMSK Modem board needs only a suitable N-FM radio .. add TWO radios and you get a D-Star repeater...add an internet connection for a fully functioning D-Star gateway, either simplex or full duplex!  This boards CMX589 GMSK modem connects directly to the GPIO socket.

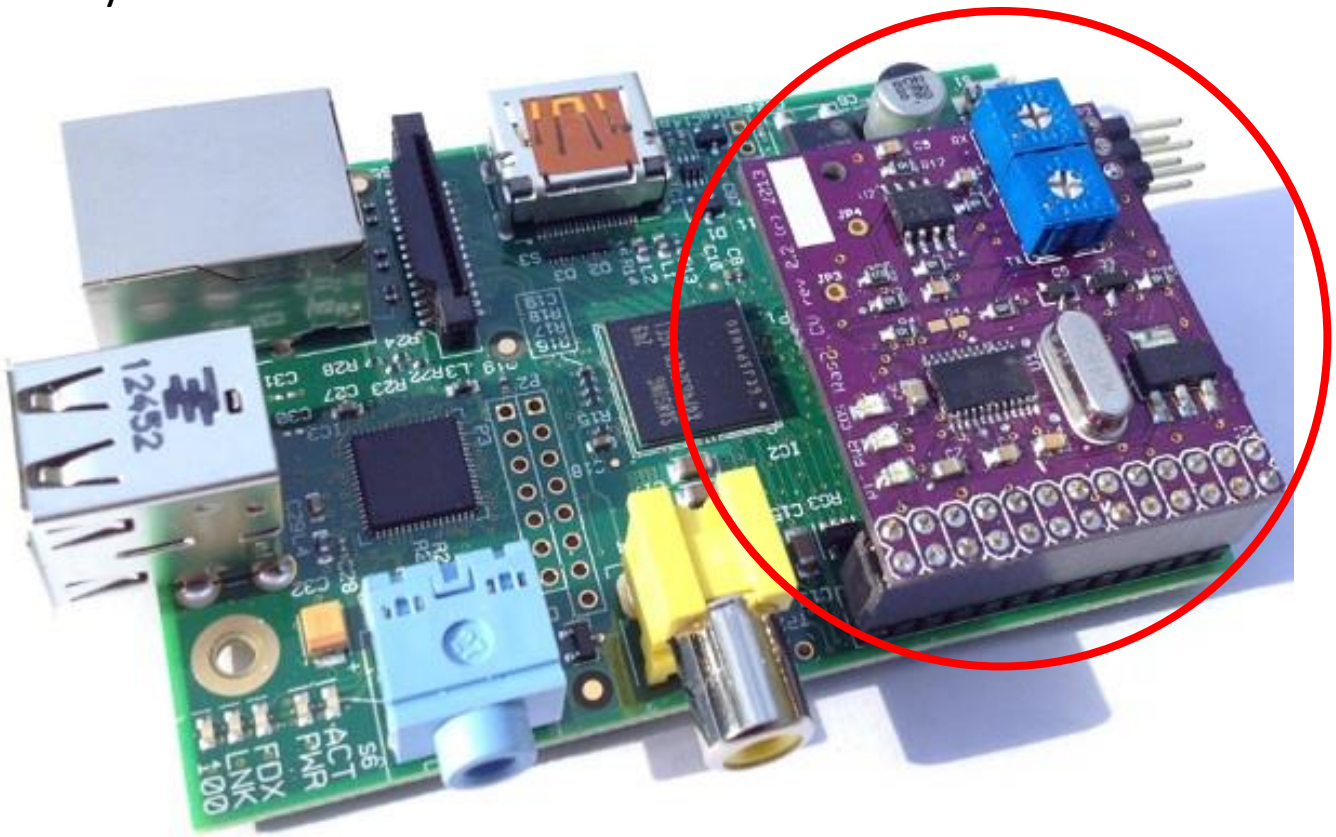

http://ki6zum.com/dstar/dv_overview.htm

# W5MPZ D-Rats ratflector (then)

Dell Optiplex 755 running Ubuntu Linux OS and
D-RATS ratflector software

USB

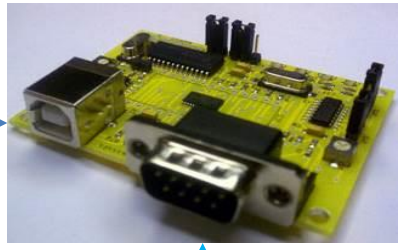

Moencom
Starboard
GMSK Node
Adapter

Audio in/out
PTT

The
Internet


Yaesu FT-2600FM Transceiver
9600 bps capable

# W5MPZ D-Rats ratflector (and now)

RPi
Running
D-RATS ratflector software

USB

Moencom
Starboard
GMSK Node
Adapter

Audio in/out
PTT

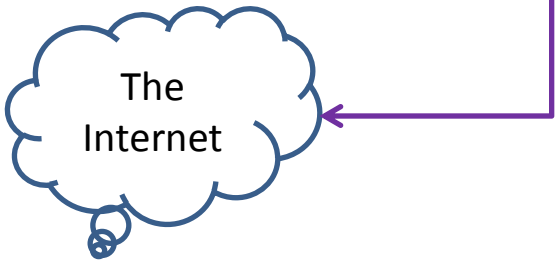



Yaesu FT-2600FM Transceiver
9600 bps capable

# Turning the RPi into an FM Transmitter PiFM

- Using the existing hardware on the RPi that is intended to generate spread-spectrum clock signals to output FM RF.
- This means that all you need to do to turn the Raspberry-Pi into a FM Transmitter is to connect an antenna onto GPIO pin 4 and run the code.

***sudo ./pifm sound.wav 100.1***

# PiFM Demonstration

# RPi LF/MF/HF/VHF WSPR Transmitter

- Weak Signal Propagation Reporter (WSPR).
- Used for weak-signal radio communication between amateur radio operators.
- Designed for sending and receiving low-power transmissions to test propagation paths on the MF and HF bands.
- WSPR implements a protocol designed for probing potential propagation paths with low-power transmissions.
- Transmissions carry a station's callsign, Maidenhead grid locator, and transmitter power in dBm.
- Stations with internet access can automatically upload their reception reports to a central database called WSPRnet, which includes a mapping facility.

- **With a little code**
  - **PiFM with a wrapper**
- **A low pass filter**
- **Your RPi is good to go**
  - **0 to 250MHz**
  - **+10dBm**

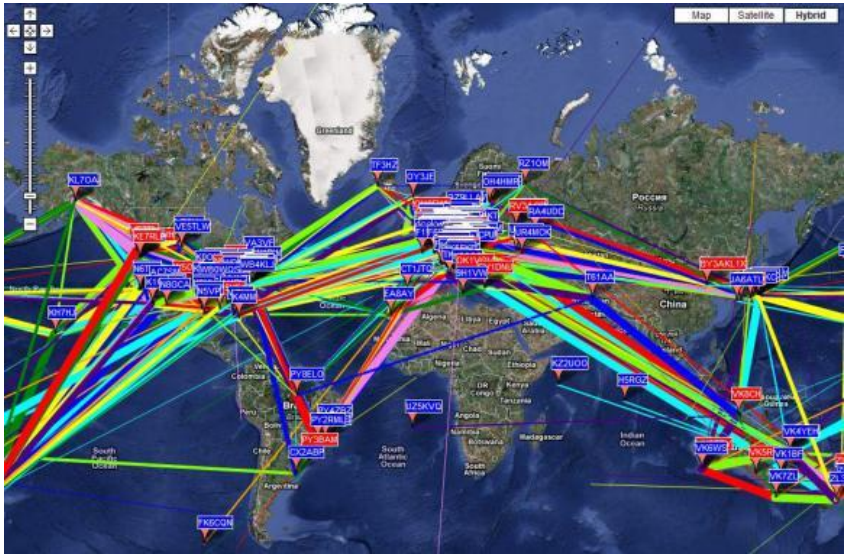


https://github.com/threeme3/WsprryPi

# PiIRLP (IRLP on a RPi)

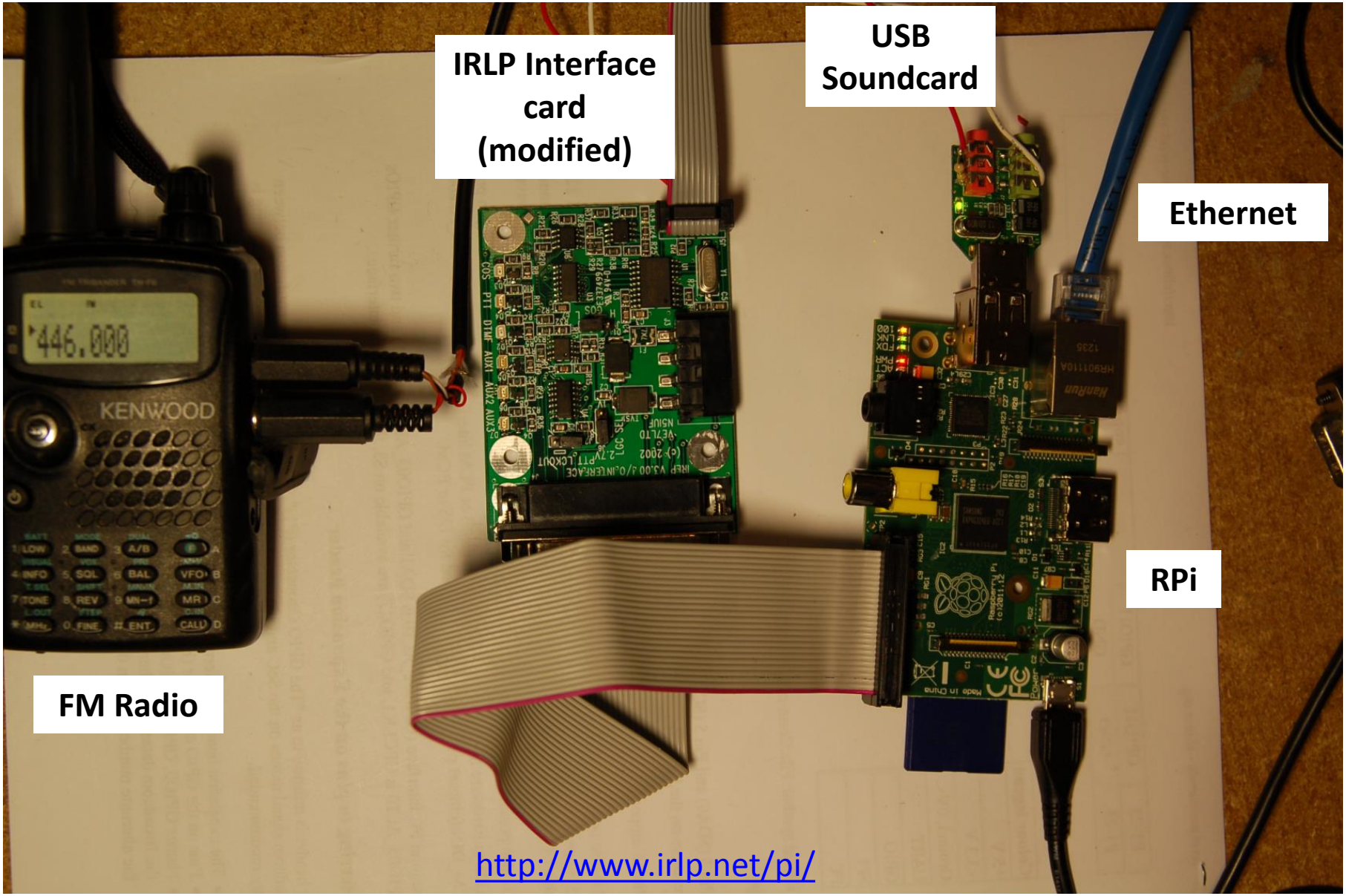


http://www.irlp.net/pi/

# A Software Defined Radio Server

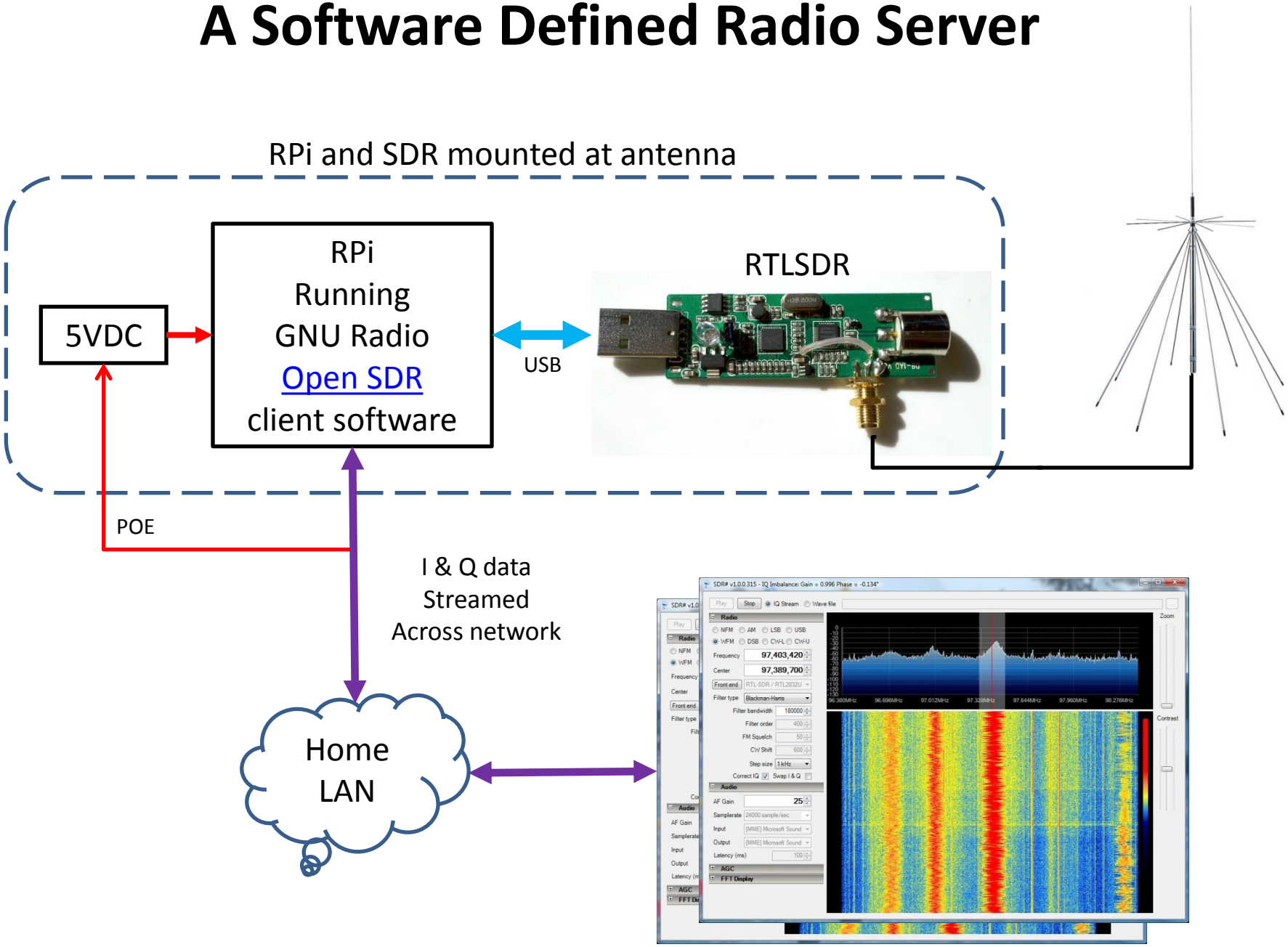

# Satellite Tracking and Antenna Rotator Control

## (a work in progess)

GPREDICT

- Gpredict is free software that runs under Windows, Linux and Mac OS.
- Gpredict has the hooks in it for interfacing to antenna rotors
- Gpredict runs on the Raspberry Pi!

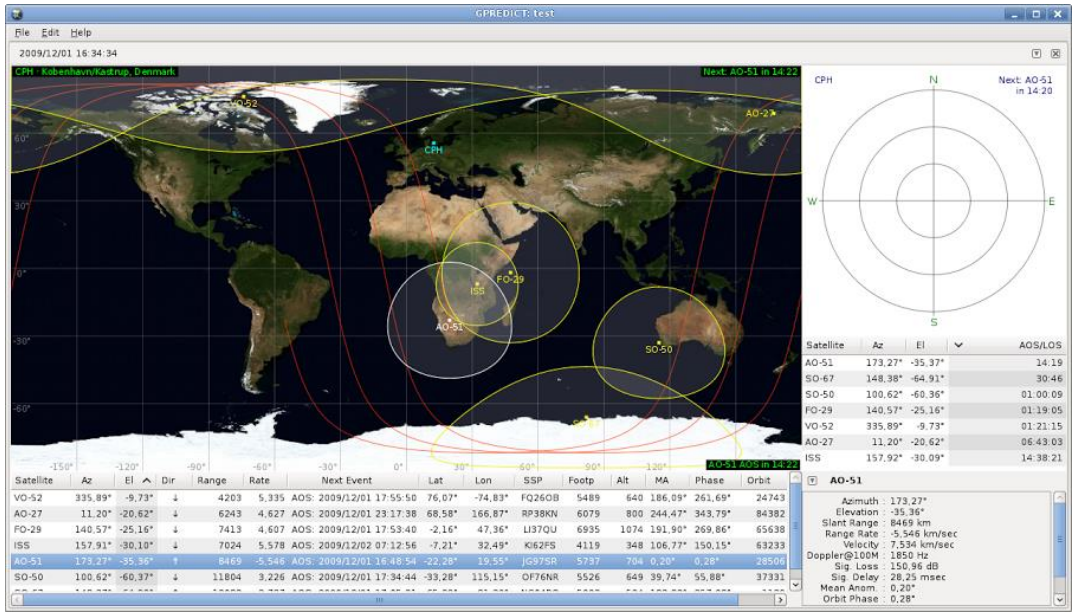


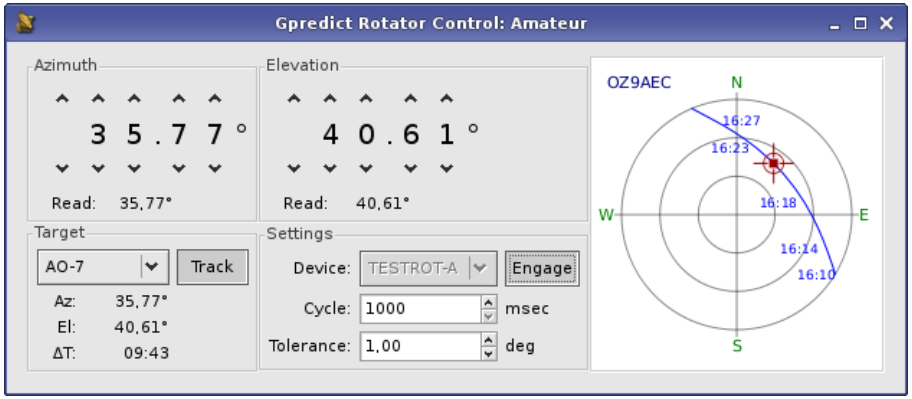

# Satellite Tracking and Antenna Rotator Control (cont.)

## (a work in progress)

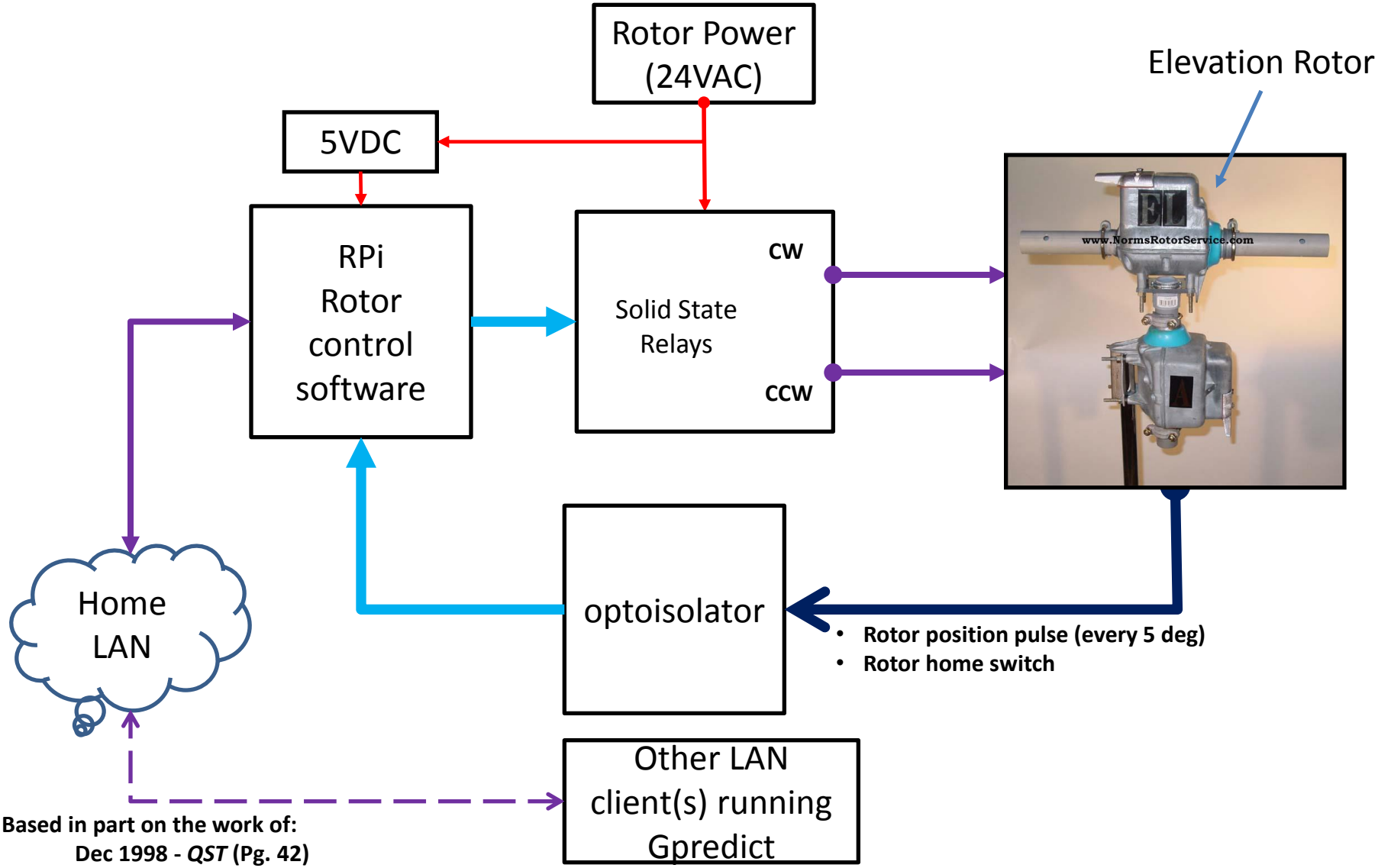


**Based in part on the work of:**
**Dec 1998 - *QST* (Pg. 42)**
**'An Inexpensive Az-El Rotator System'**
Koehler, Jim, VE5FP

# Portable Webcam

- RPi running Motion software
- Software captures video whenever motion has been detected
- Captures a still frame every minute
- Streaming video available via Wifi

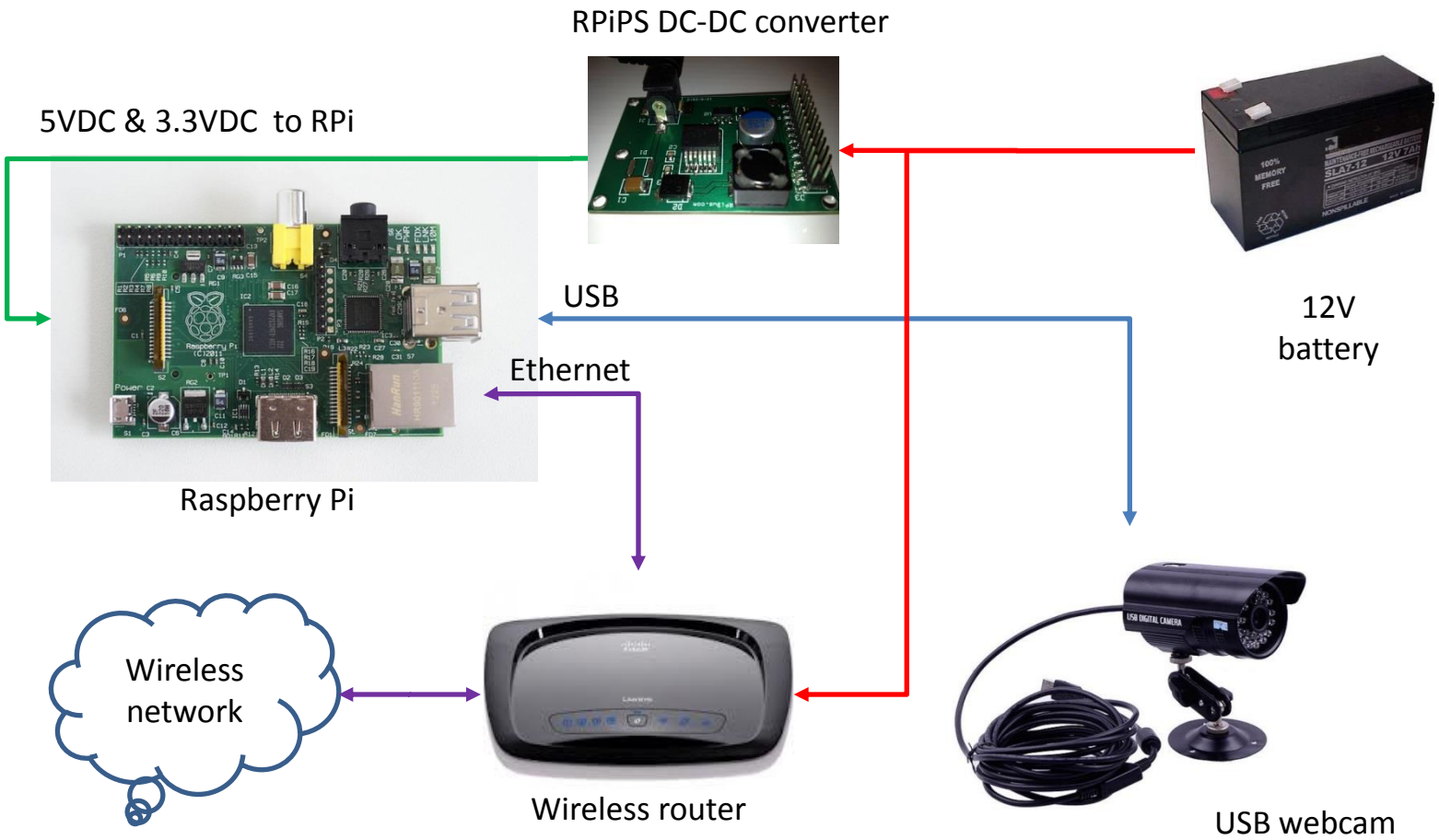


Mount on a tripod for your next Hamfest, tailgate, Field day or club activity

# Portable Webcam W5MPZ

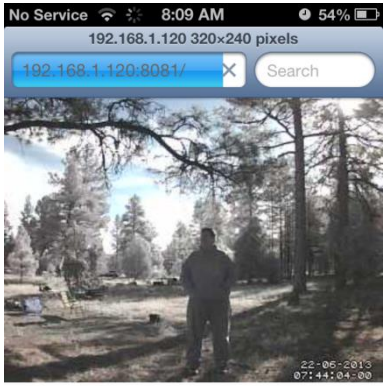


ARRL Field Day
June 22 & 23, 2013
www.arrl.org


# Rpi webcam Demonstration

# Third Party Prototype & I/O Boards for the RPi

Pi Face: Allows the RPi to control and sense physical devices such as lights, motors and sensors.

- Four momentary contact push switches
- Four LEDs.
- Two 10-A relays
- 8 general purpose open-collector outputs

*'Pi Face' Digital I/O board atop a RPi*

*'Com Pi' board atop a RPi*

Com Pi :

- RS232 Serial port
- $I^2C$ serial bus

# Xbee for the RPi

- Use to create a point to point data link
- Create your own mesh network
  - Webcams
  - Wireless sensor network node
  - Internet gateway
- Interfaces to the RPi via the UART

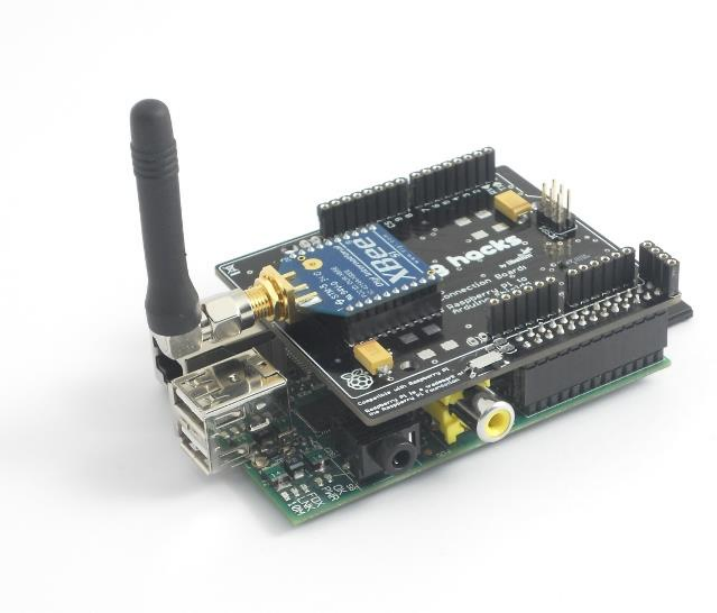


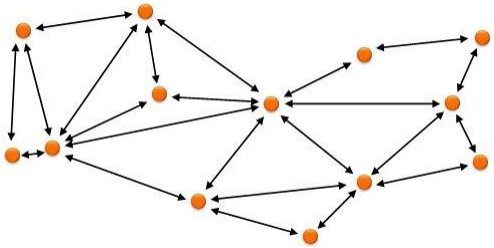

# RIO (Raspberry IO)

I/O and power supply card for Raspberry PI.
13 Ana/Digital/Pulse Inputs
2 Ana Outs
8 Digital 1A Outs
RS232
RS485
CAN
Optional 3 AXIS AHRS
Connects via the SPI buss

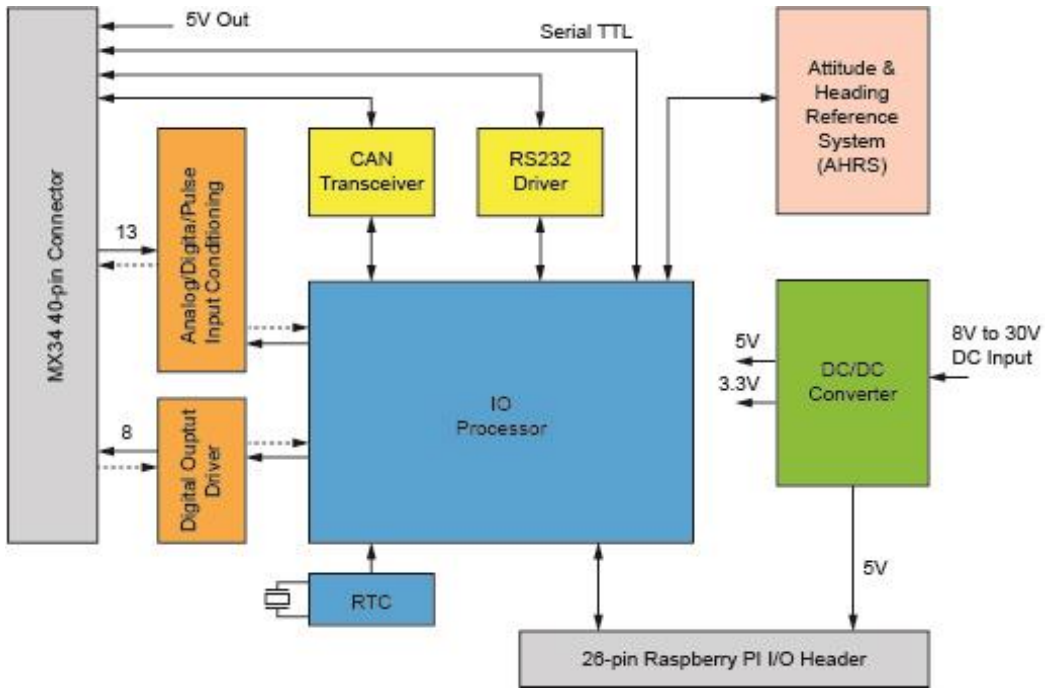


http://www.kickstarter.com/projects/95547492/smart-io-expansion-card-for-raspberry-pi

# And Many More

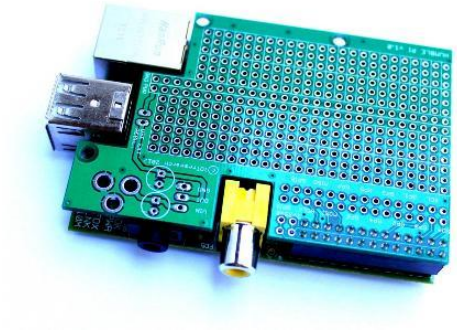

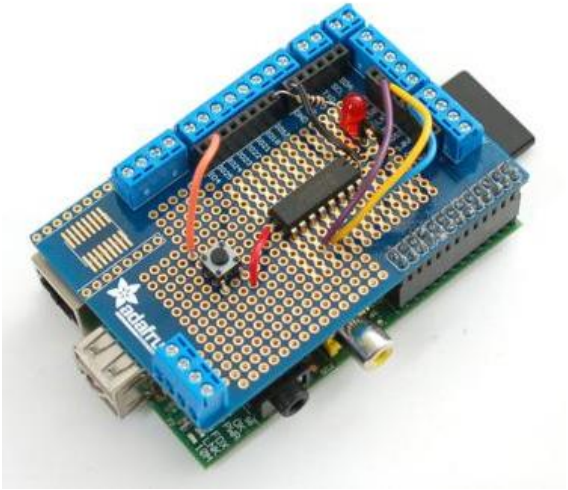

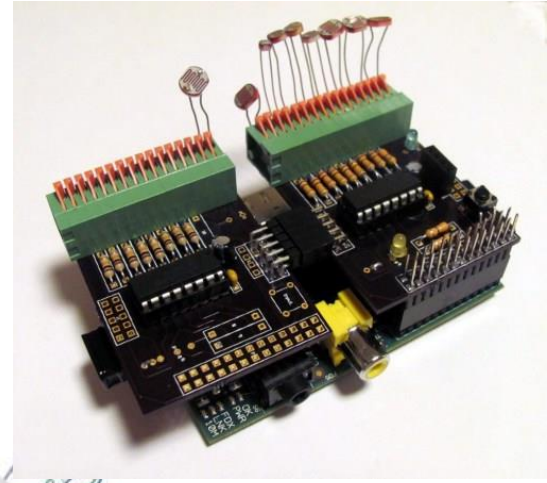

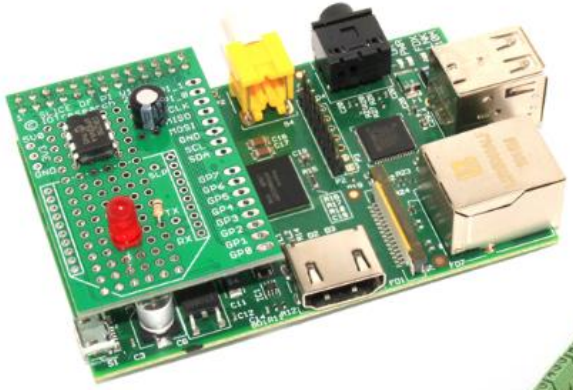

*Over 75 different boards and counting!*

http://elinux.org/RPi_Expansion_Boards

# Ham radio and the RPi

Or just about anything you can think of that combines Ham Radio and computers

- APRS
- D-Star
- ATV
- RTTY
- PSK
- Rig Control
- Packet Radio BBS
- Dx Cluster

***What are your ideas?***

# Setting up your RPI

***It really is this easy***

# Rpi Setup Quick Start

**2b Connect display**

If *not* using HDMI, plug in your analogue TV or display

**3 Connect input**

Plug in a USB keyboard and mouse

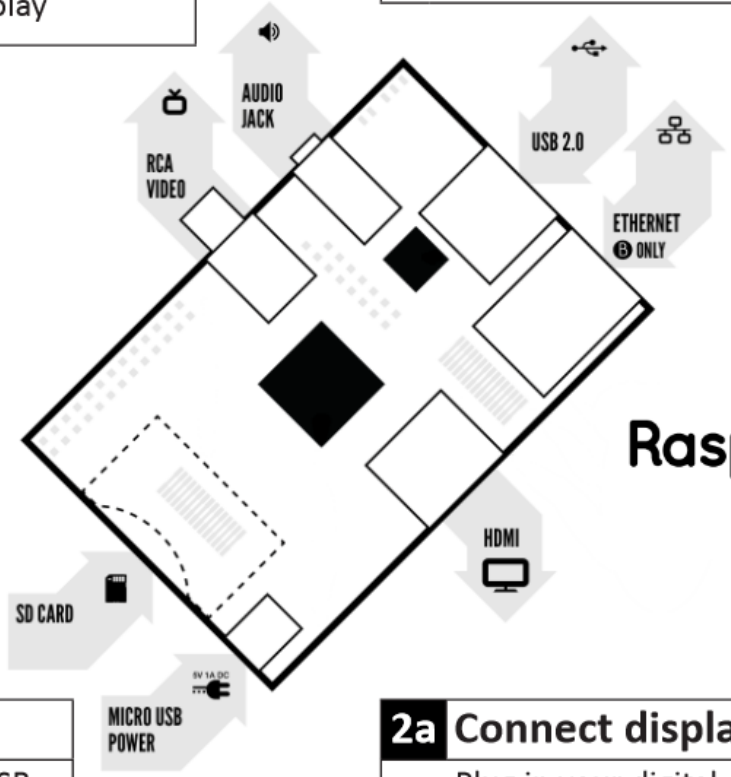


**4 Connect network**

Connect to your wired network [optional]

Raspberry Pi
Quick start

**1 Insert SD card**

See page 3 for how to prepare the SD card

**5 Power up**

Plug in the micro USB power supply

**2a Connect display**

Plug in your digital TV or monitor

http://www.raspberrypi.org/quick-start-guide

# RPi Linux Quick start help

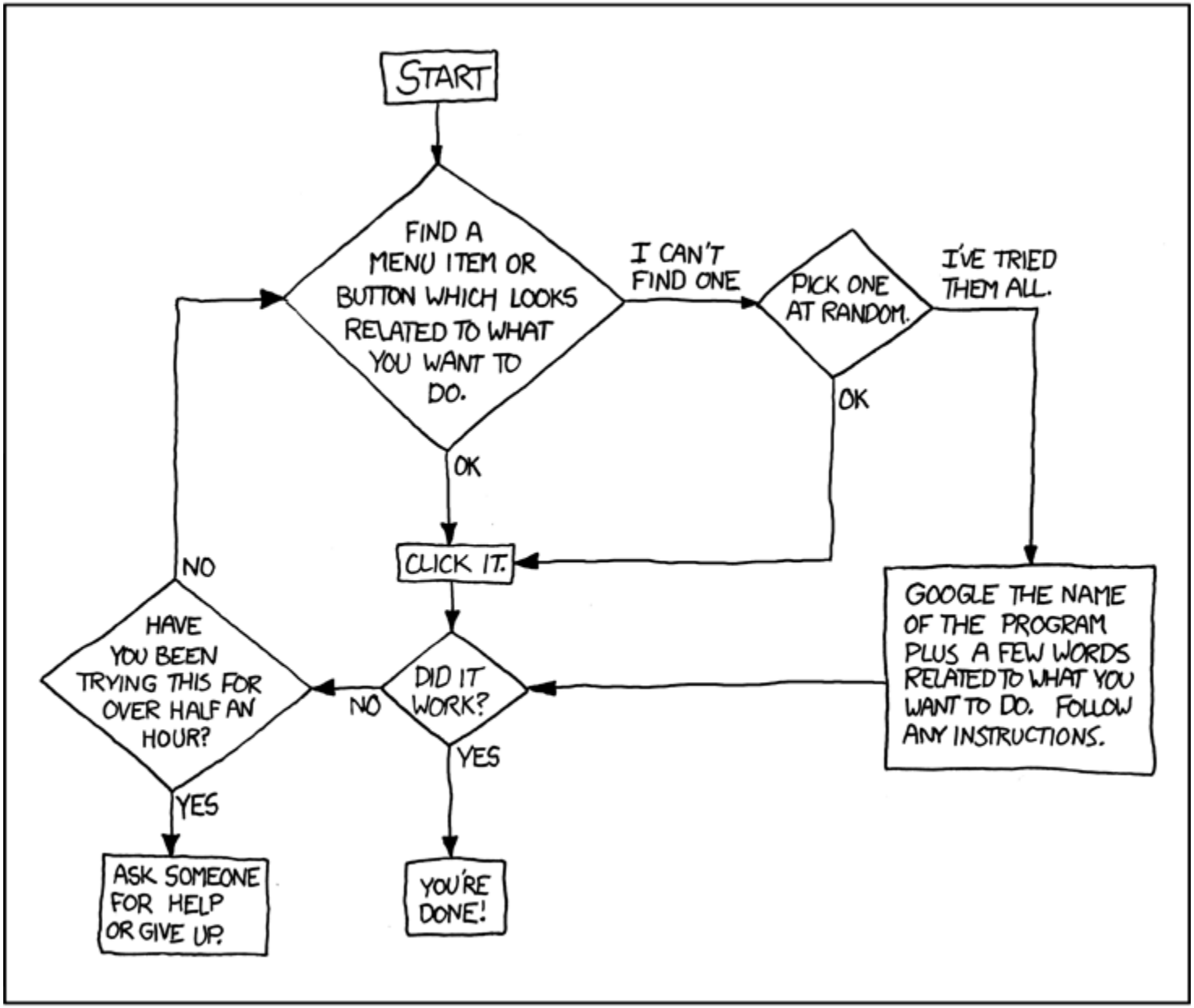

# Raspberry Pi Cookbooks

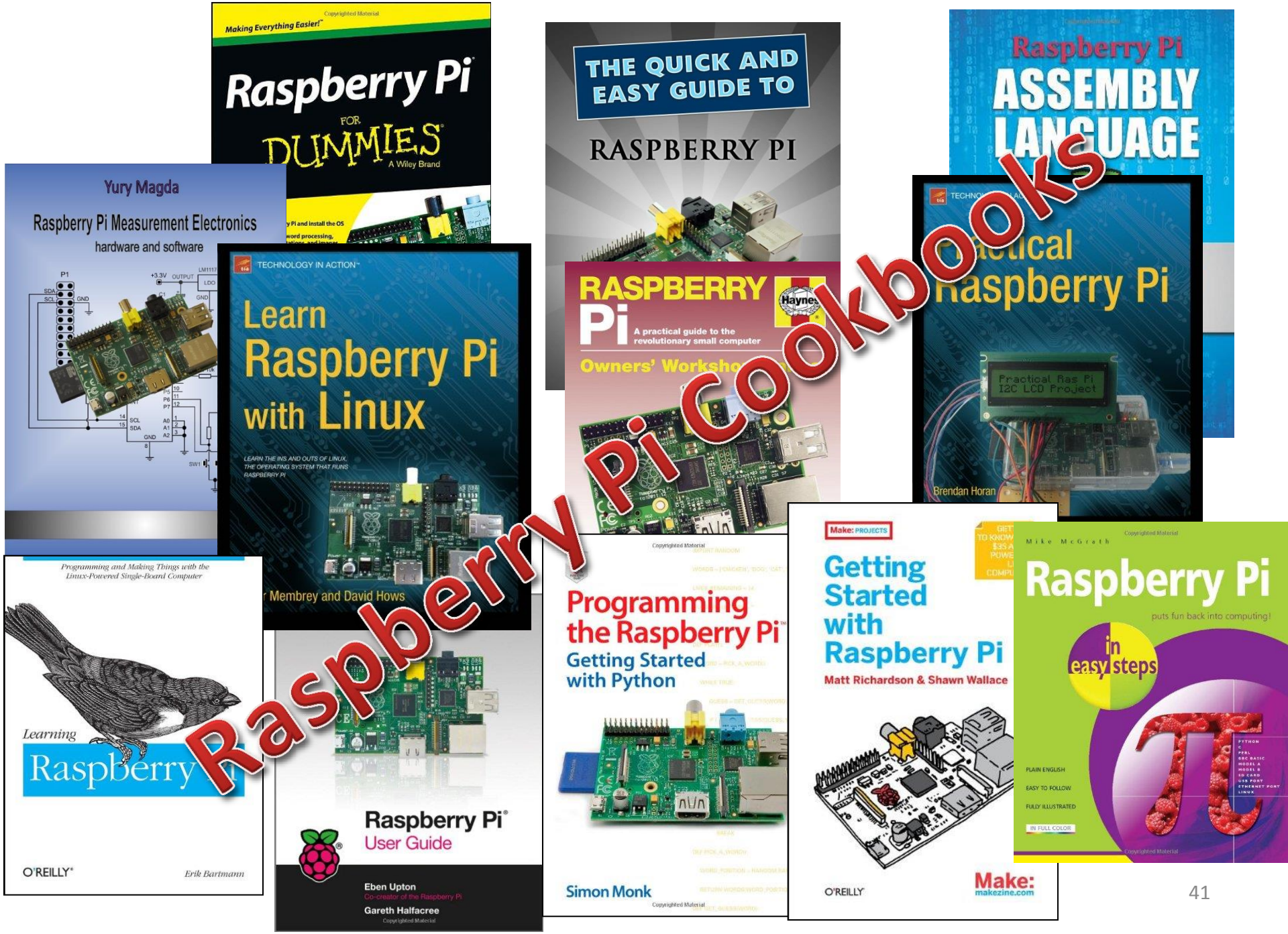

# Additional Resources

Raspberry Pi

http://www.raspberrypi.org

## Raspberry Pi Amateur Radio Yahoo Group

http://groups.yahoo.com/group/Raspberry_Pi_4-Ham_RADIO/

## Raspberry Connect

http://www.raspberryconnect.com/raspbian-packages-list/item/71-raspbian-hamradio

## Some people just don’t have enough to do!

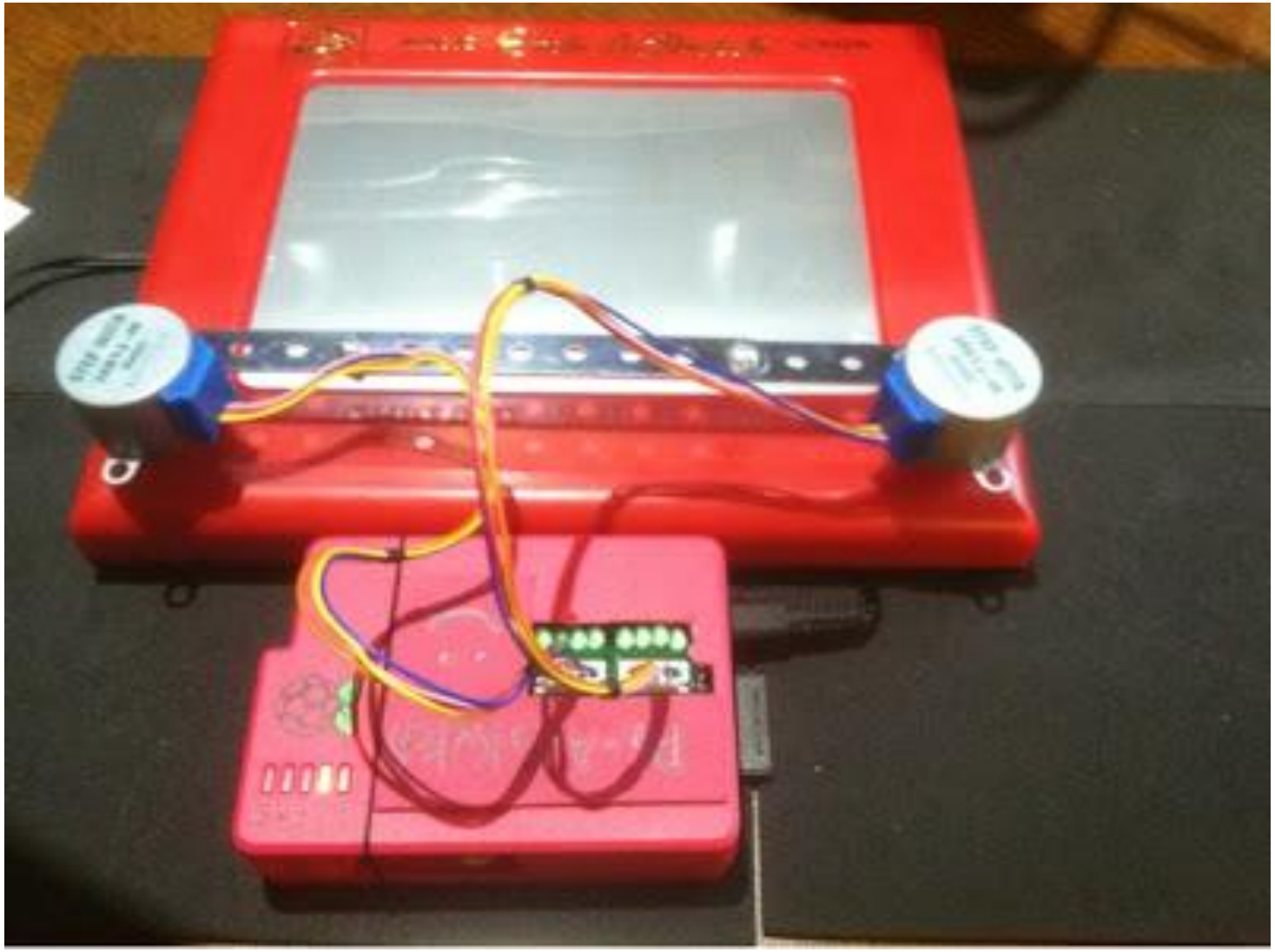

# Discussion/QUESTIONS?

# Speakers Bio

- Ed James, KA8JMW of Albuquerque, NM. Is originally from Canton, OH where he was licensed over thirty five years ago. Since then, Ed has savored from the broad palette that amateur radio offers. Activities have included the design and fabrication of various projects from DC to daylight, QRP, net operations, traffic handling, rag chewing, contesting, DX, transmitter hunting, Search and Rescue, public service, satellites, EME and as an elmer to many a new ham. The thrill of that first QSO hasn't diminished. He has over 29 years of service as an electrical engineer leading space based and defense projects at Sandia National Laboratories. Ed, his wife Carol and their five daughters are all active amateur radio operators. Ed is an Assistant Section Manager for the ARRL New Mexico Section.

- Mike Pendley, of Albuquerque, NM is originally from Long Beach Ca. Mike was first licensed in 1999 as KD5HUC. His Ham interests include digital modes, transmitter hunting, and applying computers to Ham projects. His current call sign, K5ATM, reflects his other hobby - Amateur Telescope Making. Mike's day job is in the area of embedded software development at Sandia National Laboratories where he has 40 years of experience in the areas of software development and electrical engineering. Mike is a graduate of DeVry, Phoenix, California State Collage (Hayward) , and the University of California (Davis). Mike's wife, Debbie, and their two sons are all licensed amateur radio operators. Mike is the ARRL New Mexico Section Tech-coordinator and Web Master of the New Mexico Section web site.